LC45SE-CC-600-1050

freedom in lighting **Helvar**

45 W **SELV Constant current** LED driver

Product code: 5731

45 W 220 – 240 V 0/ 50 – 60 Hz

- SELV output protection for safety and flexibility in luminaires
- Very low current ripple, complying with IEEE 1789 standard
- Suitable for DC use
- Long lifetime up to 100 000 h
- Active open load protection
- Ideal solution for Class I and Class II luminaires*
- For driving Class III (SELV) luminaires, optional strain reliefs available for independent use outside of luminaire (LC-SRA/LC1x30-SR or LC-SRA-LOOP for looping the input cables)



* See page 4 for details

SELV

Functional Description

- Adjustable constant current output: 600 mA (default) to 1050 mA
- 800 mA fixed current output option
- Current setting with external (LED-Iset) resistors
- Optional earthing connection when used independently or in Class I luminaires, see page 4 for details

Mains Characteristics

Voltage range	198 VAC – 264 VAC
	Withstands max. 320 VAC (max. 1 hour)
DC range	176 VDC - 280 VDC
starting voltage	> 190 VDC
Mains current at full load	0.20 - 0.24 A
Frequency	0 / 50 Hz – 60 Hz
THD at full power	< 10 %
Leakage current to earth	< 0.3 mA
Tested surge protection	1 kV L-N, 2 kV L-GND (IEC 61000-4-5)
Tested fast transient protection	2 kV (IEC 61000-4-4)

Insulation between circuits & driver case

Mains circuit - SELV circuit	Double/reinforced insulation
Mains and output - Driver case	Double/reinforced insulation
Mains input - Ground input	Basic insulation

Load Output (SELV <60 V)

Output current (I_{out})	600 mA (default) – 1050 mA
Accuracy	± 5 %
Ripple	< 1 %* at ⩽ 120 Hz
	*) Low frequency, LED load: Cree XP-G L LEDs
PstLM	< 0.03*
SVM	< 0.04*
	*) At full power, measured with Cree XP-G LED modules.
U_{out} (max) (abnormal)	60 V

I_{LED}	600 mA	800 mA Fixed output	1050 mA
P_{Rated}	32.4 W	43.2 W	45 W
U_{LED}	25 - 54 V	25 - 54 V	25 - 42.8 V
PF (λ) at full load	0.96	0.98	0.98
Efficiency (η) at full load	89 %	89 %	89 %

Operating window

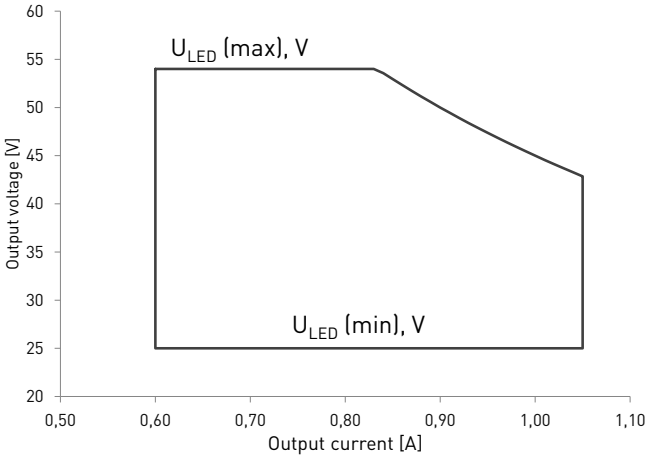

Driver performance

Typical efficiency

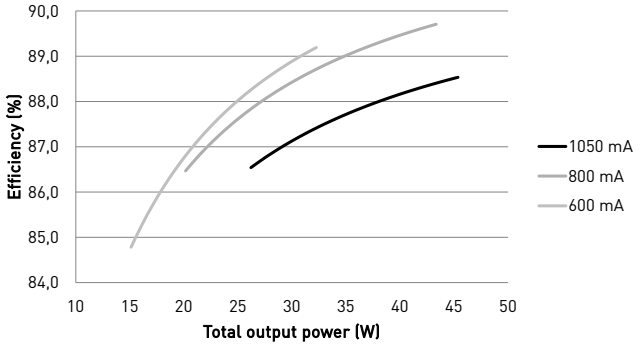

Typical power factor

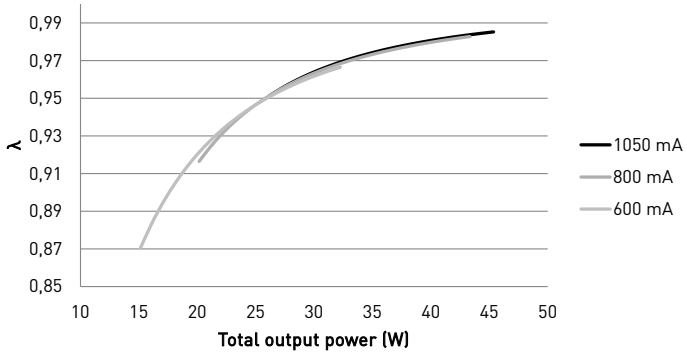

Operating Conditions and Characteristics

Absolute highest allowed t_c point temperature	85 °C
Tc life (55 000 h) temperature	80 °C
Ambient temperature range*	–25 °C ... +45 °C*
in independent use	–25 °C ... +45 °C
Storage temperature range	–40 °C ... +80 °C
Maximum relative humidity	No condensation
Life time (90 % survival rate)	100 000 h, at t_c = 70 °C
	55 000 h, at t_c = 80 °C
	40 000 h, at t_c = 85 °C

**) For other than independent use, higher t_a of the controlgear possible as long as highest allowed t_c point temperature is not exceeded*

Quantity of drivers per miniature circuit breaker 16 A Type C

Based on I_{cont}	Based on inrush current I_{peak}	Typ. peak inrush current I_{peak}	1/2 value time, Δt	Calculated energy, $I_{peak}^2 \Delta t$
49 pcs.	51 pcs.	25 A	190 µs	0.089 A^2s

CONVERSION TABLE FOR OTHER TYPES OF MINIATURE CIRCUIT BREAKER

MCB type	Relative quantity of LED drivers
B 10 A	37 %
B 16 A	60 %
B 20 A	75 %
C 10 A	62 %
C 16 A	100 % (see table above)
C 20 A	125 %

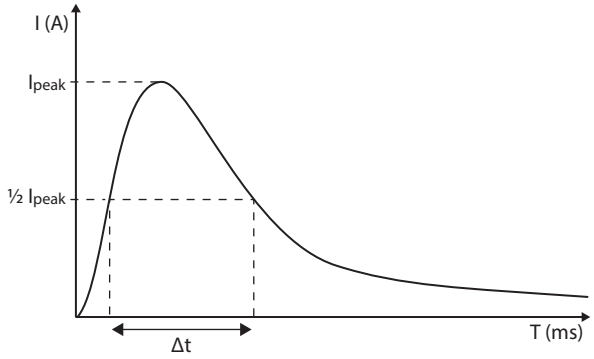

Type C MCB's are strongly recommended to use with LED lighting. Please see more details in "MCB information" document in each driver product page in "downloads & links" section.

Connections and Mechanical Data

Wire size	0.5 mm² – 1.5 mm²
Wire type	Solid core and fine-stranded
Wire insulation	According to EN 60598
Maximum driver to LED wire length	1.5 m
Weight	116 g
IP rating	IP20

Connections

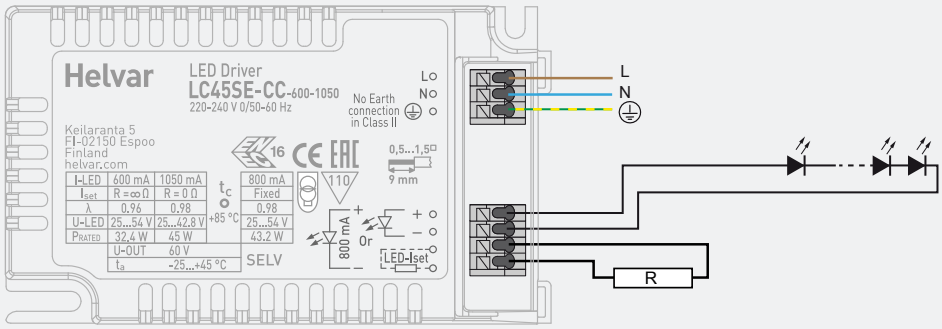

Note:

- *Earth connection to PE terminal is optional and not needed for the functionality of the driver. See page 4 for details.*
- *Not suitable for load side switching operation*
- *Label may differ if the unit is preset to fixed current*

Dimensions (mm)

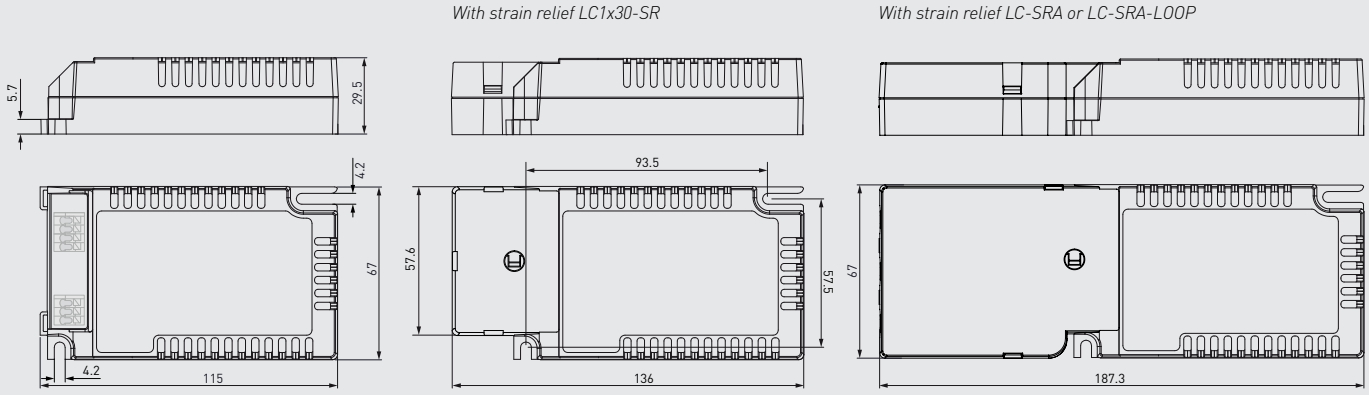

The LED-Iset resistor/current setting values are adjusted according to the LEDset specification. The resistor value for each required output current can thus be calculated from the formula R [Ω] = (5 [V] / I_out [A]) * 1000. Below are the available LED-Iset resistors from Helvar, pre-adjusted for the most common output currents.

Helvar LED-Iset resistors and currents (Nominal I_{out} (±5 % tol.))

LED-Iset resistor model	MAX	1000 mA	950 mA	900 mA	850 mA	800 mA	750 mA	700 mA	650 mA	No resistor
I_{out} (mA)	1050	1000	950	900	850	800	750	700	650	600
Order code	T90000	T91000	T90950	T90900	T90850	T90800	T90750	T90700	T90650	N/A
Resistance values (Ω)	0	4.99k	5.23k	5.6k	5.9k	6.2k	6.65k	7.15k	7.68k	∞

The current can be adjusted also with normal resistors by selecting suitable resistor value (formula R [Ω] = (5 [V] / I_out [A]) * 1000). Reference resistor values can be found below order code in the table above.

LC45SE-CC-600-1050 LED driver is suited for built-in usage in luminaires. With LC1x30-SR/LC-SRA/LC-SRA-LOOP strain relief, independent use is possible too. In order to have safe and reliable LED driver operation, the LED luminaires will need to comply with the relevant standards and regulations (e.g. IEC/EN 60598-1). The LED luminaire shall be designed to adequately protect the LED driver from dust, moisture and pollution. The luminaire manufacturer is responsible for the correct choice and installation of the LED drivers according to the application and product datasheets. Operating conditions of the LED drivers may never exceed the specifications as per the product datasheet.

Installation & operation

Maximum ambient and t_c temperature:

- For built-in components inside luminaires, the t_a ambient temperature range is a guideline given for the optimum operating environment. However, integrator must always ensure proper thermal management (i.e. mounting base of the driver, air flow etc.) so that the t_c point temperature does not exceed the t_c maximum limit in any circumstance.
- Reliable operation and lifetime is only guaranteed if the maximum t_c point temperature is not exceeded under the conditions of use.

Current setting resistor

LC45SE-CC-600-1050 LED driver features a constant current output adjustable via current setting resistor.

- An external resistor can be inserted in to the current setting terminal, allowing the user to adjust the LED driver output current.
- When no external resistor is connected, then the LED drivers will operate at their default lowest current level.
- A standard through-hole resistor can be used for the current setting. To achieve the most accurate output current it is recommended to select a quality low tolerance resistor. Minimum diameter for resistor leg is 0.51mm.
- Always connect the current setting resistor only into the terminals marked with LED-Iset on the LED driver label.
- For the resistor/current values, refer to the table on page 3.

LED driver earthing

- LC45SE-CC-600-1050 is Class I LED driver suitable for Class I and II luminaires, as well as driving Class III (SELV) luminaire parts in independent installation with external strain relief.
- If used inside **Class I** luminaires, the earth cable is recommended to be connected to improve the EMC performance of the driver, but it is not mandatory. It is the responsibility of the integrator to ensure that the assembled luminaire EMC performance complies with the latest standards. Driver RFI measurement data will be provided by request.
- If used inside **Class II** luminaires, the safety of the luminaire shall be ensured through double/reinforced insulation of live parts. LC45SE-CC-600-1050 has double/reinforced insulation between accessible and live parts, and is suitable for use in all Class II luminaires. In this case the earth terminal of the driver must be left unconnected and the luminaire terminal block shall not have any protective earthing terminal.
- If used in **independent** installation with Class I/II/III luminaires, the earth cable connection is optional. Please follow the instructions provided in the strain relief datasheets.

Miniature Circuit Breakers (MCB)

- Type-C MCB's with trip characteristics in according to EN 60898 are recommended.
- Please see more details in "MCB information" document in each driver product page in "downloads & links" section.

Installation site

- The general preferred installation position of LED drivers for independent use is to have the top cover facing upwards.
- Minimum recommended distances below:

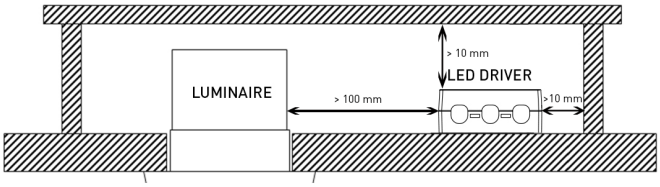

- Suitable for installation upside down and in the corner, in this case separate spacers must be used. For more information, please consult Helvar.

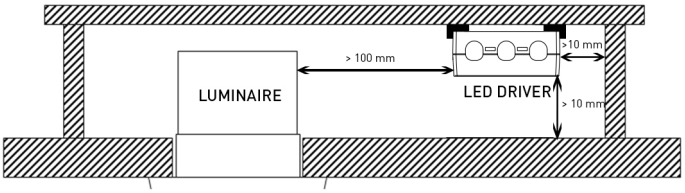

Lamp failure functionality

Short circuit

Driver can withstand output short circuit.

Underload

Driver can withstand underload, however reliable operation is only guaranteed in specified voltage range.

Overload

Driver can withstand minor overload, however reliable operation is only guaranteed in specified voltage range.

No load

When open load is detected, driver limits output voltage according to Uout (max) (abnormal) and goes into low power consumption stand-by mode. After resolving the fault, the normal driver operation can be resumed through a mains reset (> 2 seconds).

Conformity & standards

General and safety requirements	EN 61347-1: 2015
Particular safety requirements for DC or AC supplied electronic control gear for LED modules	EN 61347-2-13: 2014 + A1: 2017
Thermal protection class	EN 61347, C5e
Mains current harmonics	EN 61000-3-2: 2014
Limits for voltage fluctuations and flicker	EN 61000-3-3: 2013
Radio frequency interference	EN 55015: 2013
Immunity standard	EN 61547: 2009
Performance requirements	EN 62384: 2006+ A1:2009
Recommended Practices for Modulating Current in High-Brightness LEDs for Mitigating Health Risks to Viewers	IEEE 1789-2015
Compliant with relevant EU directives	
RoHS/REACH compliant	
ENEC and CE / UKCA marked	

Label symbols



Safety isolating control gear with short circuit protection (SELV control gear).



Thermally controlled control gear, incorporating means of protection against overheating to prevent the case temperature under any conditions of use from exceeding 110 °C.